Pre Diagnosis Device

Advanced Multiplexed M0-5E Integrated COprocessor

31 October, 2008

Presentation Outline

- **Application Example: today / tomorrow**

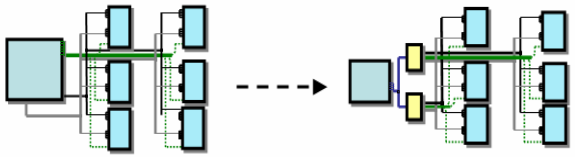

- **Block Diagram and Features**

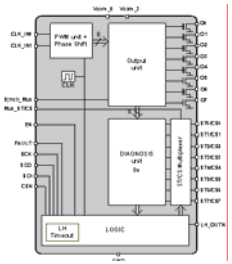

- **Descriptions of the functionalities**

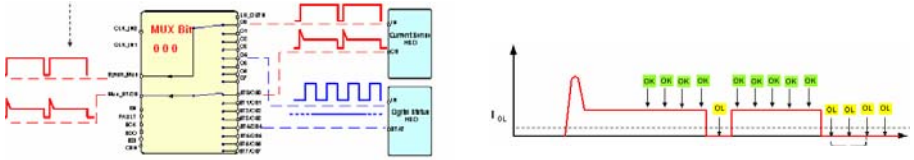

- **Description of the SPI Structure**

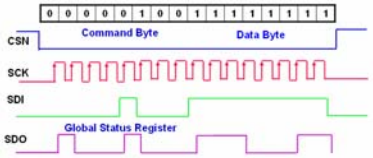

M0-5/ M0-5E Solution of Today (application example)

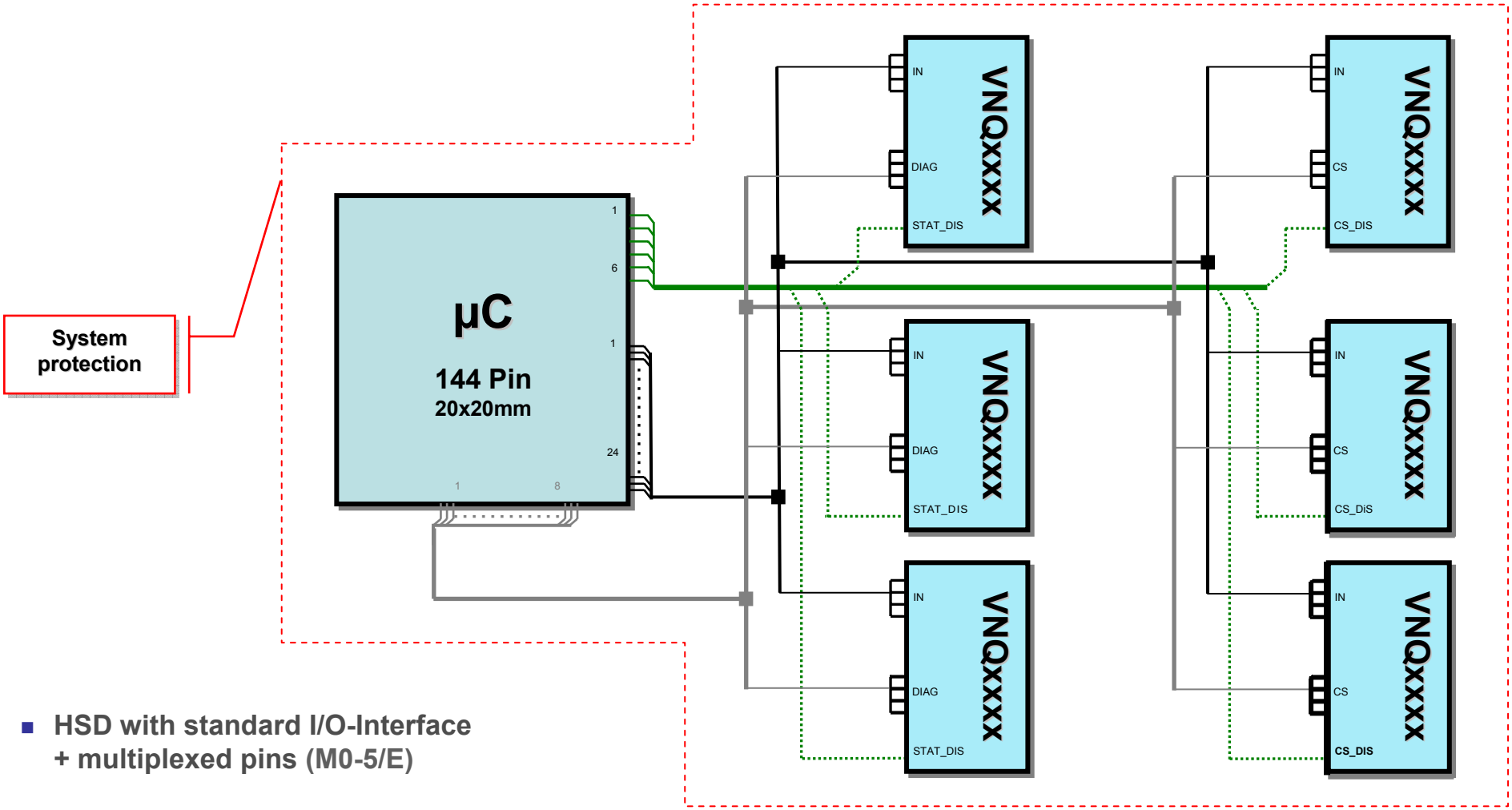

- HSD with standard I/O-Interface
  + multiplexed pins (M0-5/E)
- µC with high pincount needed
  ⇨ large package, PCB space, cost

Load channels:	***24***	
µC-I/Os Inputs:	24	
µC-I/Os Status:	24	(8)
µC-I/Os Select:	0	(6)
Total µC-I/Os:	**48**	**(38)**

M0-5 + PreDiag Solution of Tomorrow (application example)

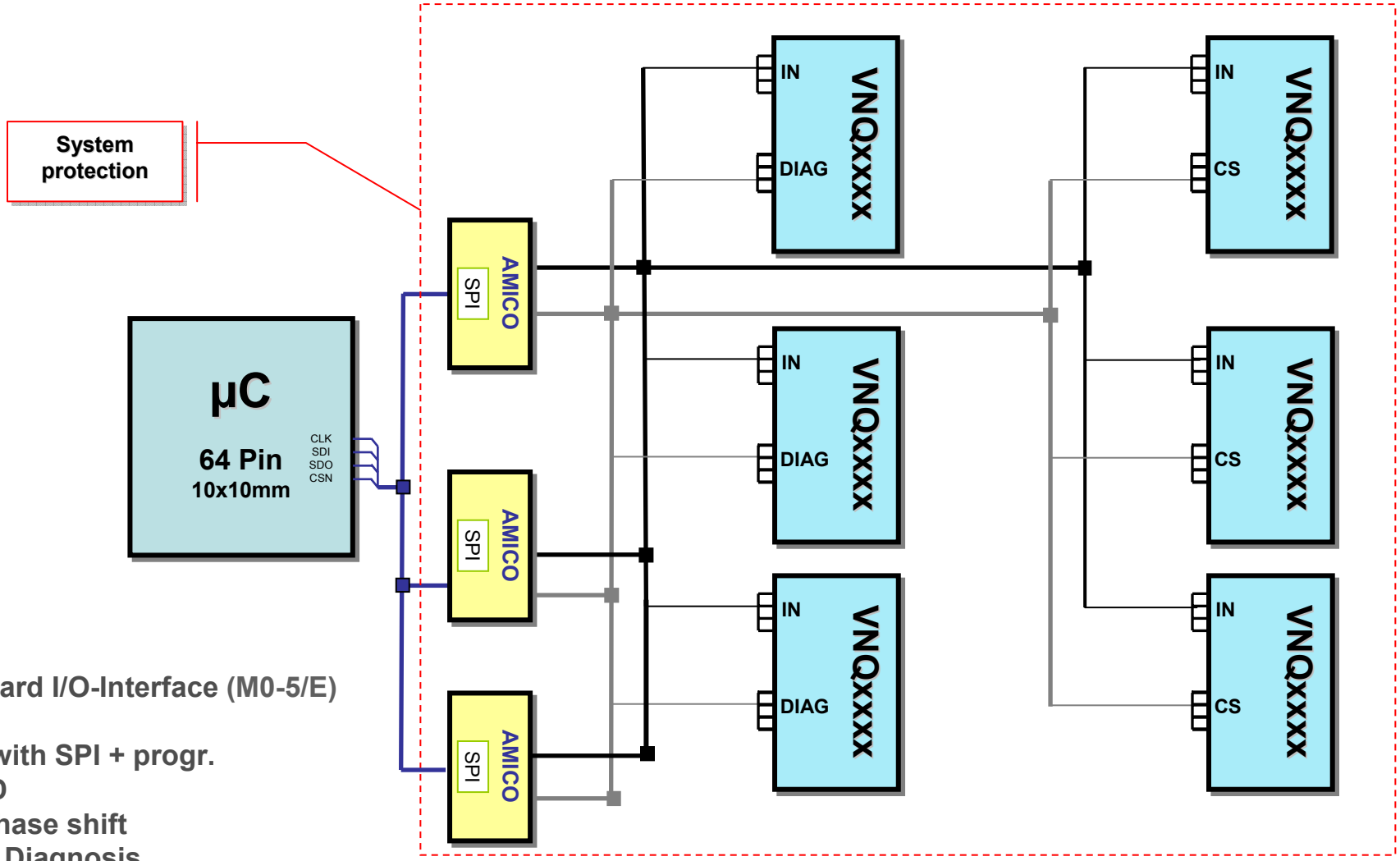

- HSD with standard I/O-Interface (M0-5/E)
- AMICO device with SPI + progr.
  - control of HSD
  - PWM gen. + phase shift
  - detailed sync. Diagnosis
- µC with small pincount + memory needed
  ⇨ smaller package, cost saving

Load channels: *24*
Total µC-I/Os: 9 .. 15

Key Success Factors of the L99PD08

- **Communication via SPI**
  - Configurability
  - FMEA considerations
  - Lower pin counts from µC side

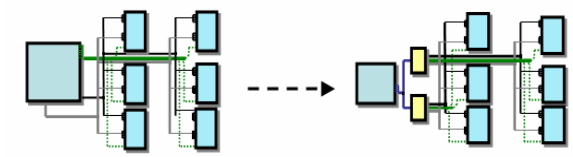

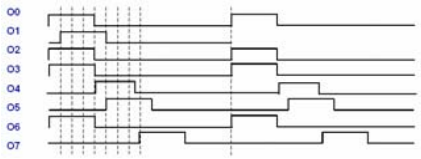

- **Reduces µC ressources**
  - PWM Generation
  - Synchronous diagnostic
  - Detailed diagnostic

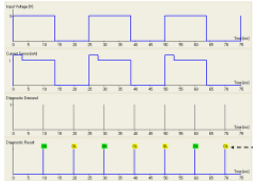

- **Solution based on M0-5 / *Enhanced* Family**
  - Market acceptance
  - Load adaptation
  - Layout flexibility

- **Additional functions**
  - Limp home
  - Current multiplexer with config. gains …

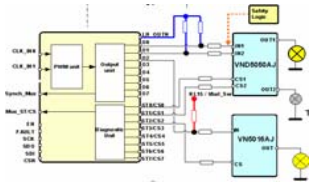

Solution vs Requirements

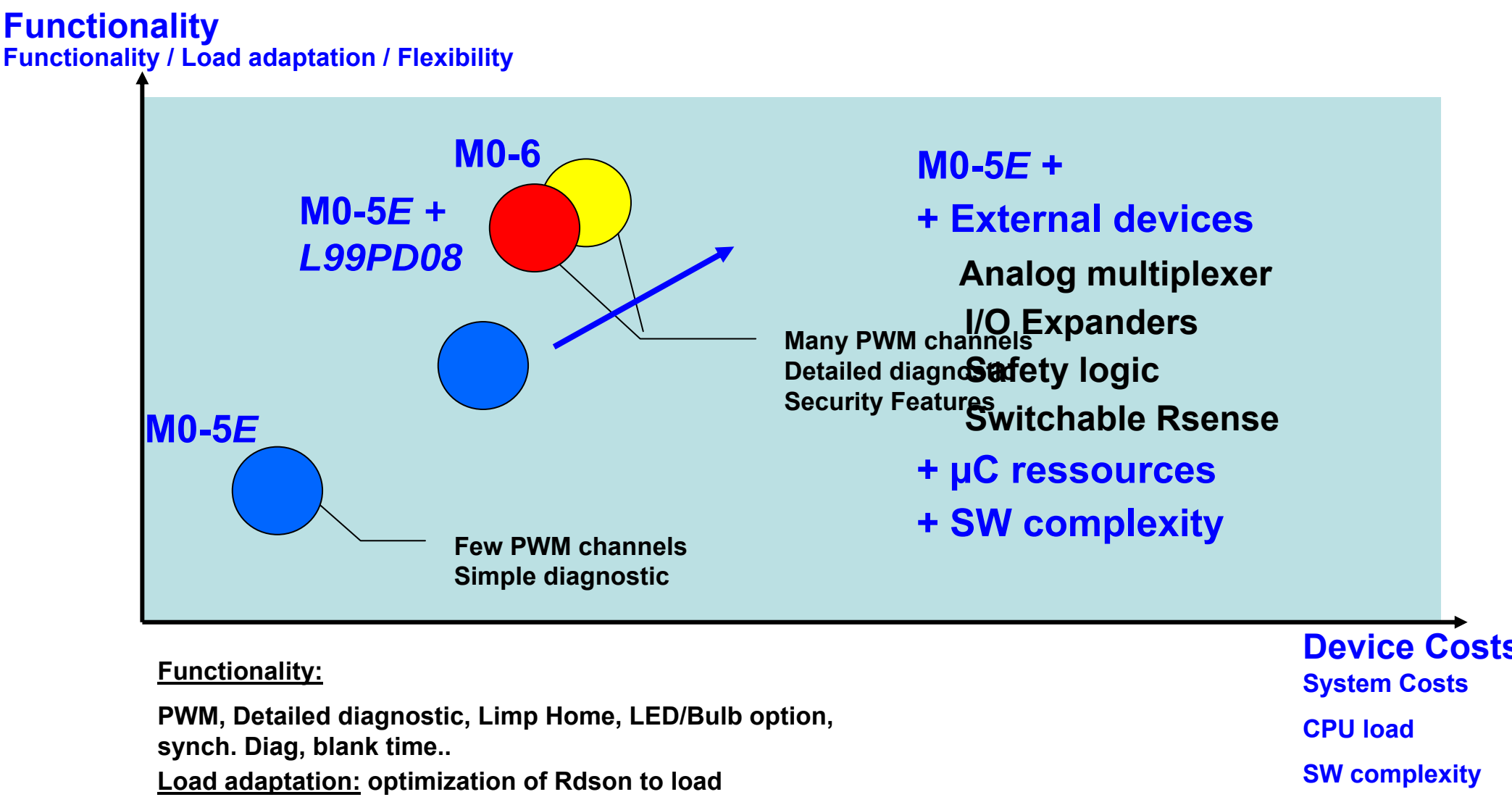

Functionality:

PWM, Detailed diagnostic, Limp Home, LED/Bulb option, synch. Diag, blank time..

Load adaptation: optimization of Rdson to load

Flexibility: choice between single / dual / quad channels HSD

Presentation Outline

- Application Example: today / tomorrow

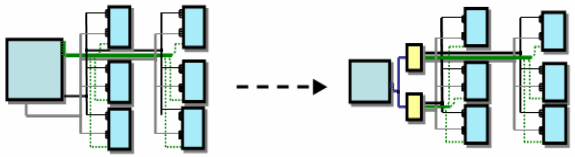

- Block Diagram and Features

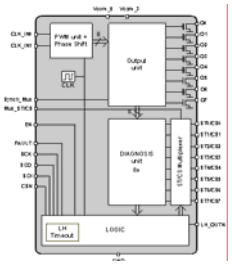

- Descriptions of the functionalities

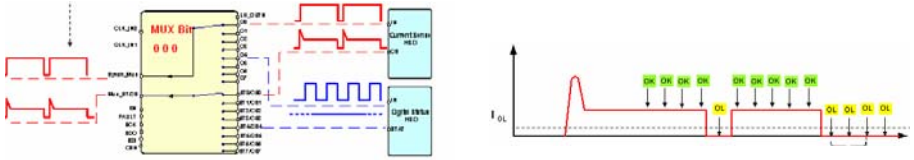

- Description of the SPI Structure

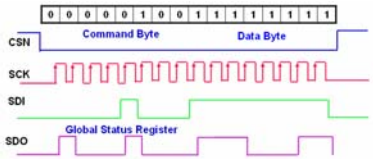

Features

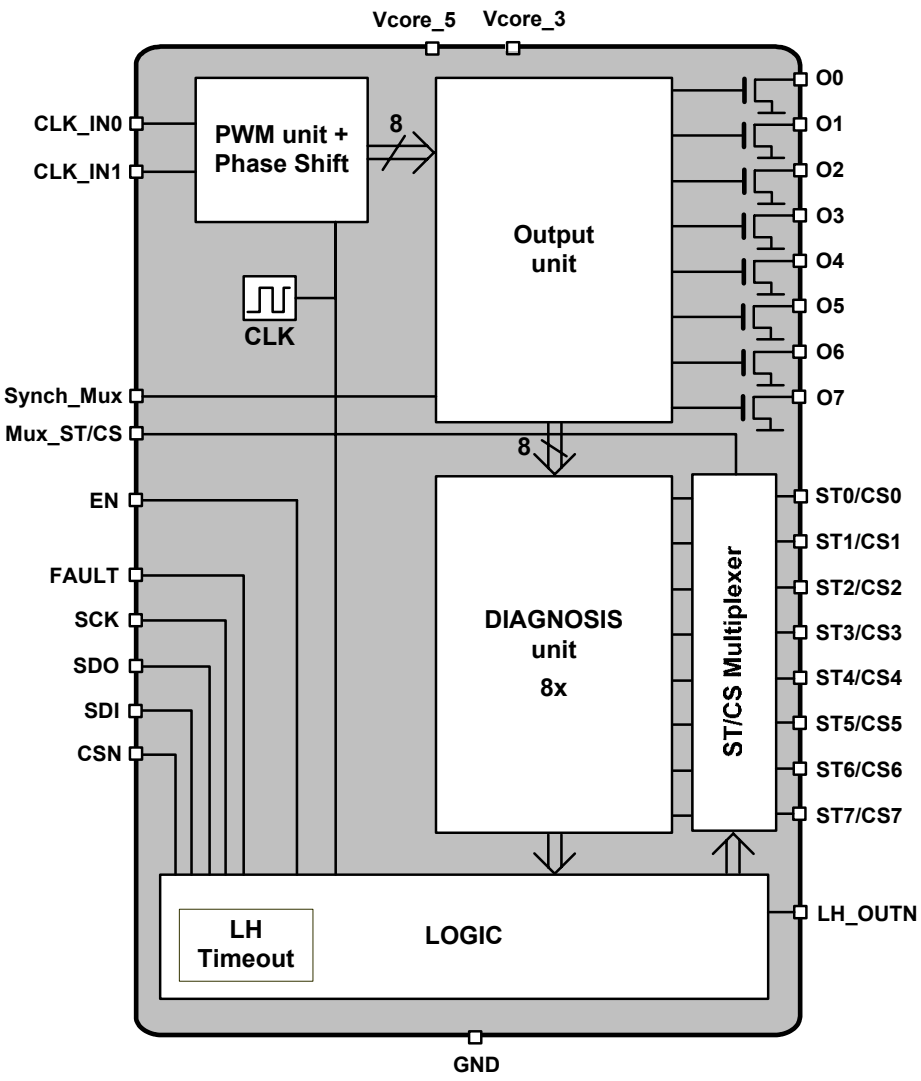

- **8-Channel Pre-driver**
  - ⇨ for M0-5 / M0-5E High Side Drivers
  - ⇨ PWM generation from CLK_INx
  - ⇨ internal fall back PWM (~ 120Hz)
  - ⇨ programmable phase shift
  - ⇨ programmable latch-off
- **Synchronous Diagnostic**
  - ⇨ for analog current sense and digital status
  - ⇨ detection of:
    - Overload
    - Overtemperature
    - Open load
    - Short to battery (also M0-5E Current Sense)
    - Power limitation (M0-5E)
  - ⇨ programmable threshold for overload / open load in on state
  - ⇨ on board filtering
  - ⇨ multiplexed current sense
- **Limp Home Functionality & Safety**
- **Communication via SPI**
  - ⇨ 3.3V / 5V compatible
- **Package: LQFP32**

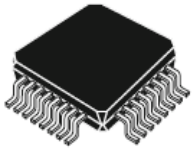

Presentation Outline

- Application Example: today / tomorrow

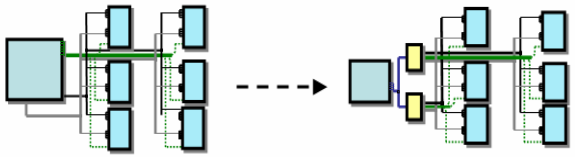

- Block Diagram and Features

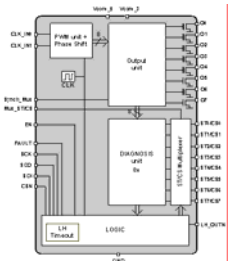

- Descriptions of the functionalities

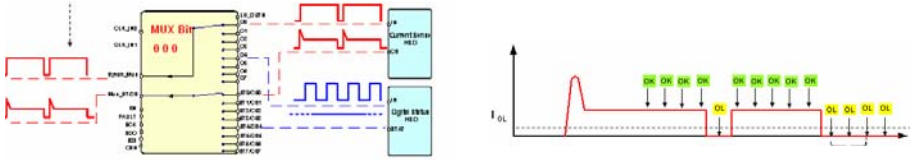

- Description of the SPI Structure

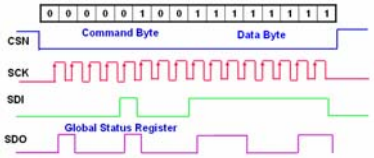

Details of the functionalities

- **PWM generation**
- Phase shift
- Diagnostic Synchronization Pin
- Chip Select Timeout
- Limp Home
- On board Filtering
- Blank Time / Sampling delay
- Synchronous diagnostic
- Direct current reading

PWM Generation

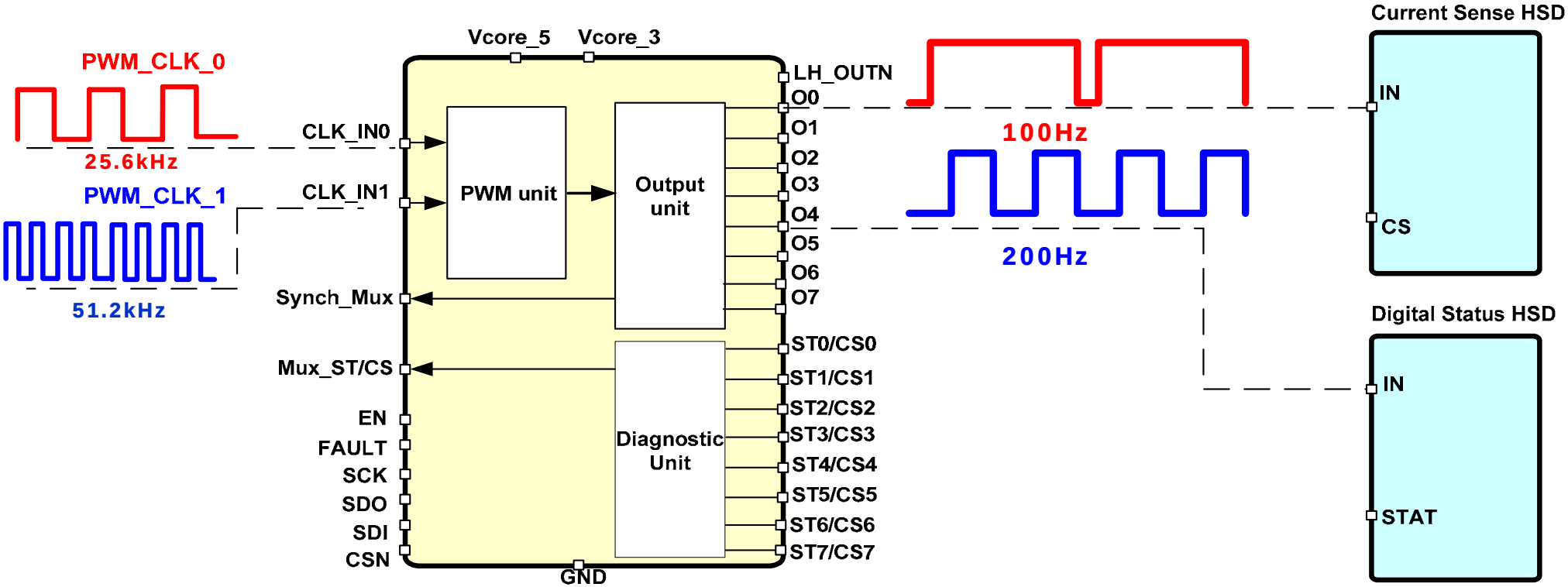

The AMICO generates the PWM signal with 8 bit resolution from the PWM_CLK_0/1.

The duty cycle with a step of 0.4% is programmed via SPI.

In this example, Freq $_{PWM_CLK0}$ = 256 · Freq $_{O0}$ and Freq $_{PWM_CLK1}$ = 256 Freq $_{O4}$

PWM_CLK_0 or PWM_CLK_1 can be selected independently for any output by SPI.

Details of the functionalities

- PWM generation
- **Phase shift**
- Diagnostic Synchronization Pin
- Chip Select Timeout
- Limp Home
- On board Filtering
- Blank Time
- Synchronous diagnostic
- Direct current reading

Phase Shift 1/2

	b7				b3				
PHASE_CH0	0	0	0	0	0	x	x	x	No delay
PHASE_CH1	0	0	0	1	0	x	x	x	Delay 2/32 of PWM Period
PHASE_CH2	0	0	0	0	0	x	x	x	No delay
PHASE_CH3	0	0	0	0	0	x	x	x	No delay
PHASE_CH4	0	1	0	0	0	x	x	x	Delay 8/32 of PWM Period
PHASE_CH5	0	1	0	1	1	x	x	x	Delay 11/32 of PWM Period
PHASE_CH6	0	0	0	0	0	x	x	x	No delay
PHASE_CH7	1	0	0	0	1	x	x	x	Delay 17/32 of PWM Period

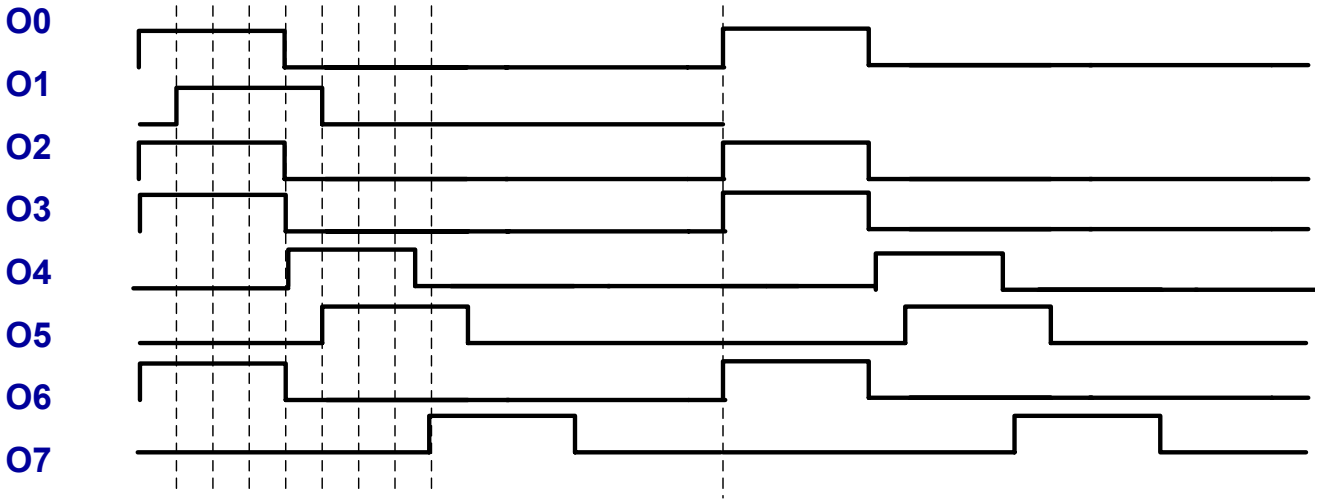

The Prediag can introduce a phase shift with a step of 1/32 of the PWM period.

Phase Shift 2/2 – Example

Switching 4x55W bulbs - Influence on Vbat net

- Without phase shift

Switching ON

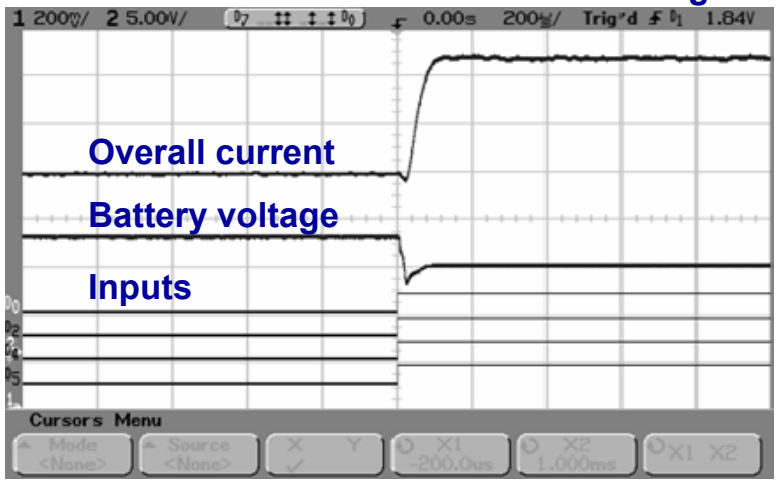

Switching OFF

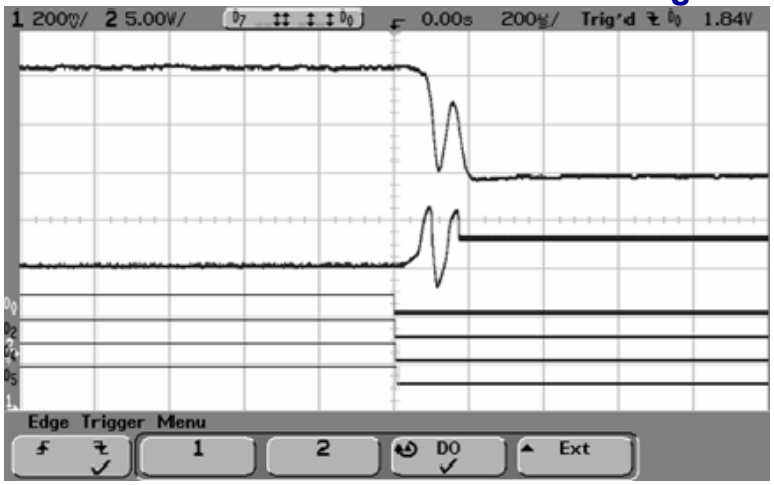

- With phase shift

Switching ON

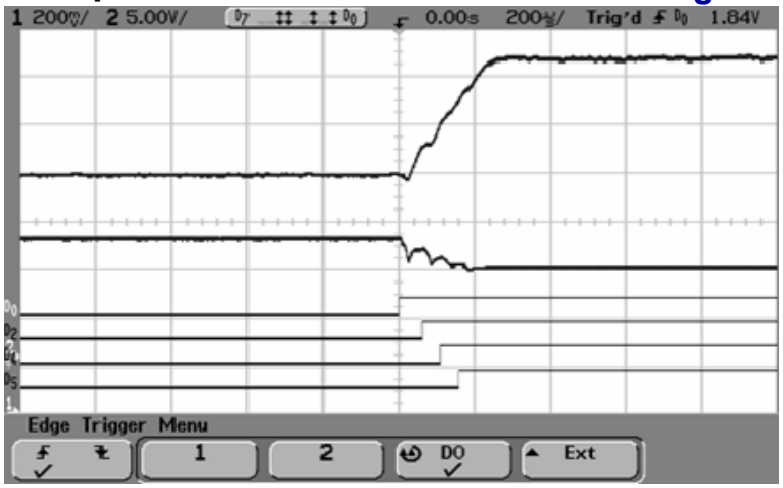

Switching OFF

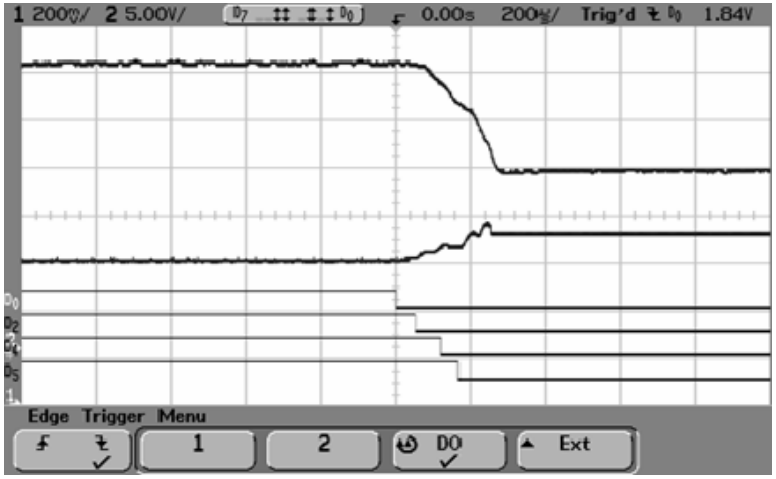

Details of the functionalities

- PWM generation
- Phase shift
- **Diagnostic Synchronization Pin**
- Chip Select Timeout
- Limp Home
- On board Filtering
- Blank Time
- Synchronous diagnostic
- Direct current reading

Diagnostic Synchronization Pin

Synch_Mux pin reflects the AMICO output of the selected channel

<u>Case 1:</u> A Current Sense HSD is selected

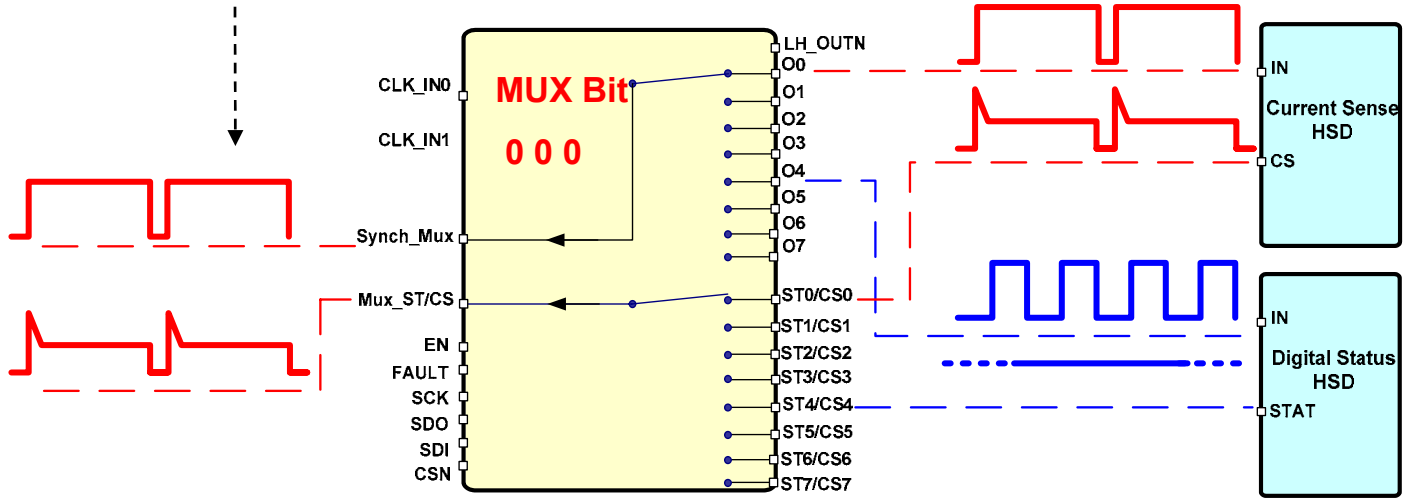

<u>Case 2:</u> Digital Status HSD is selected

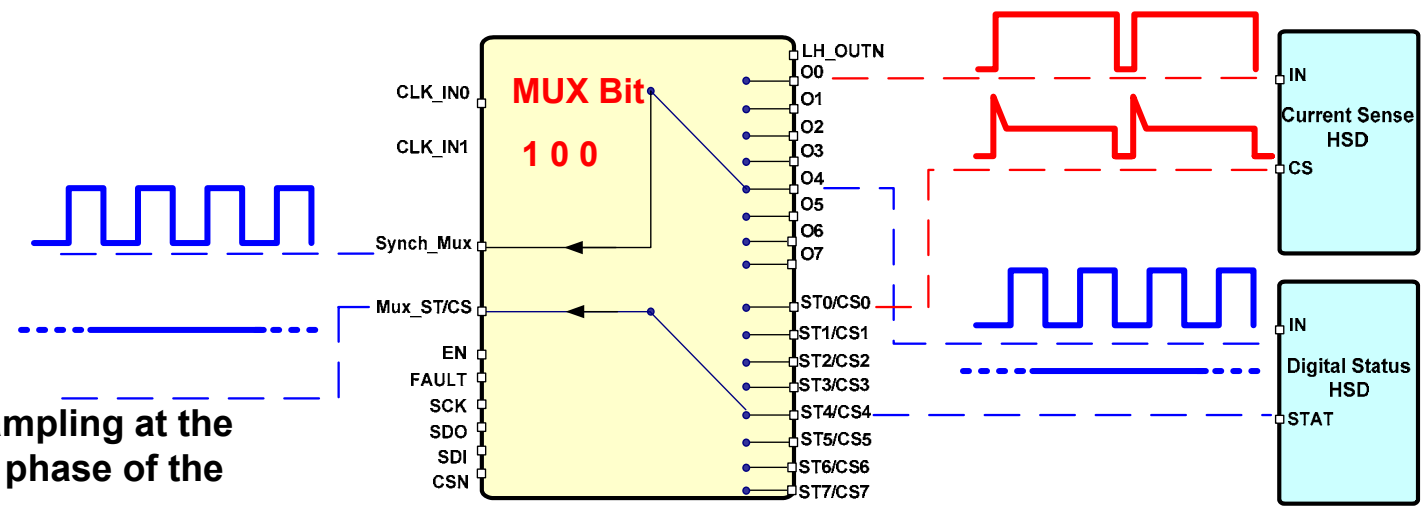

The Synch_Mux pin enables a synchronization between the sampling at the MUX_ST/CS and the ON or OFF phase of the High Side Drivers

Details of the functionalities

- PWM generation
- Phase shift
- Diagnostic Synchronization Pin
- **Chip Select Timeout**
- Limp Home
- On board Filtering
- Blank Time
- Synchronous diagnostic
- Direct current reading

Chip Select Timeout

In normal mode the CSN pin must be served within Chip Select Timeout. The internal counter is reset by the rising edge of the CSN pin.

When a Timeout occurs the device enters FAIL SAFE mode (LimpHome). The outputs are high impedance.

The CS timeout value is set in CONTROL register:

- 50ms
- 100ms (default)
- 200ms
- 400ms

Device enters back to normal mode by settings LHomeN bit to 1.

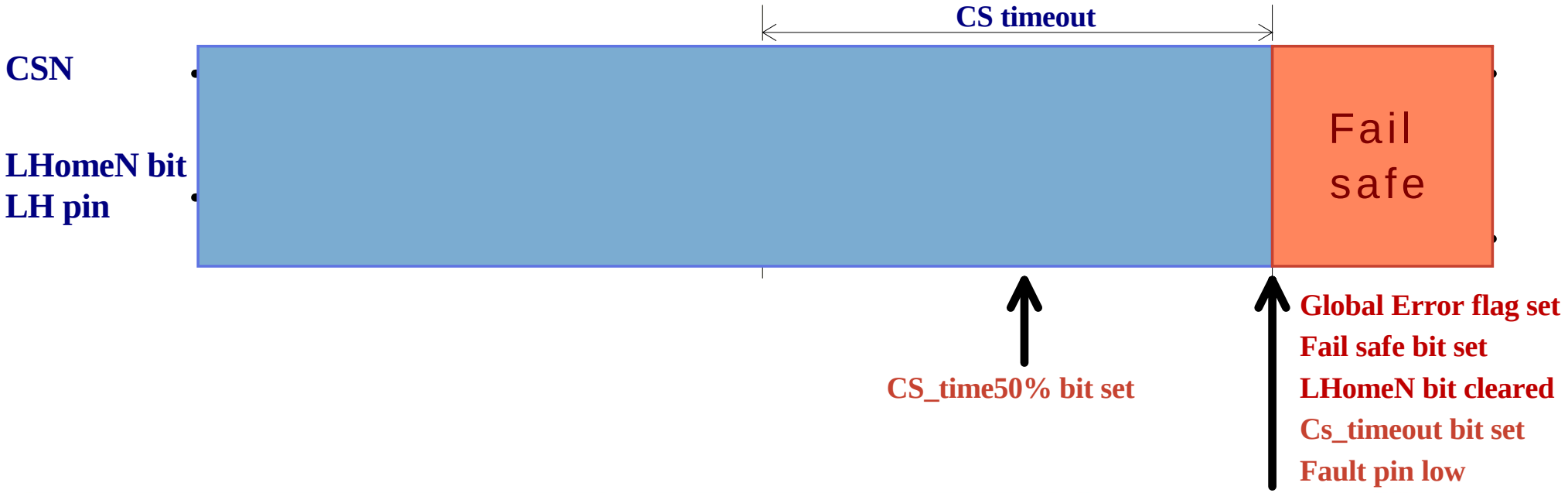

Details of the functionalities

- PWM generation
- Phase shift
- Diagnostic Synchronization Pin
- Chip Select Timeout
- **Limp Home**
- On board Filtering
- Blank Time/ Sampling delay
- Synchronous diagnostic
- Direct current reading

Limp Home Output Pin in normal mode 1/2

In normal mode: the limp home output pin pulls up the inputs of the High Side Drivers to turn on the channels

The High Side Drivers are turned off if the corresponding output is turned on (Output 7)

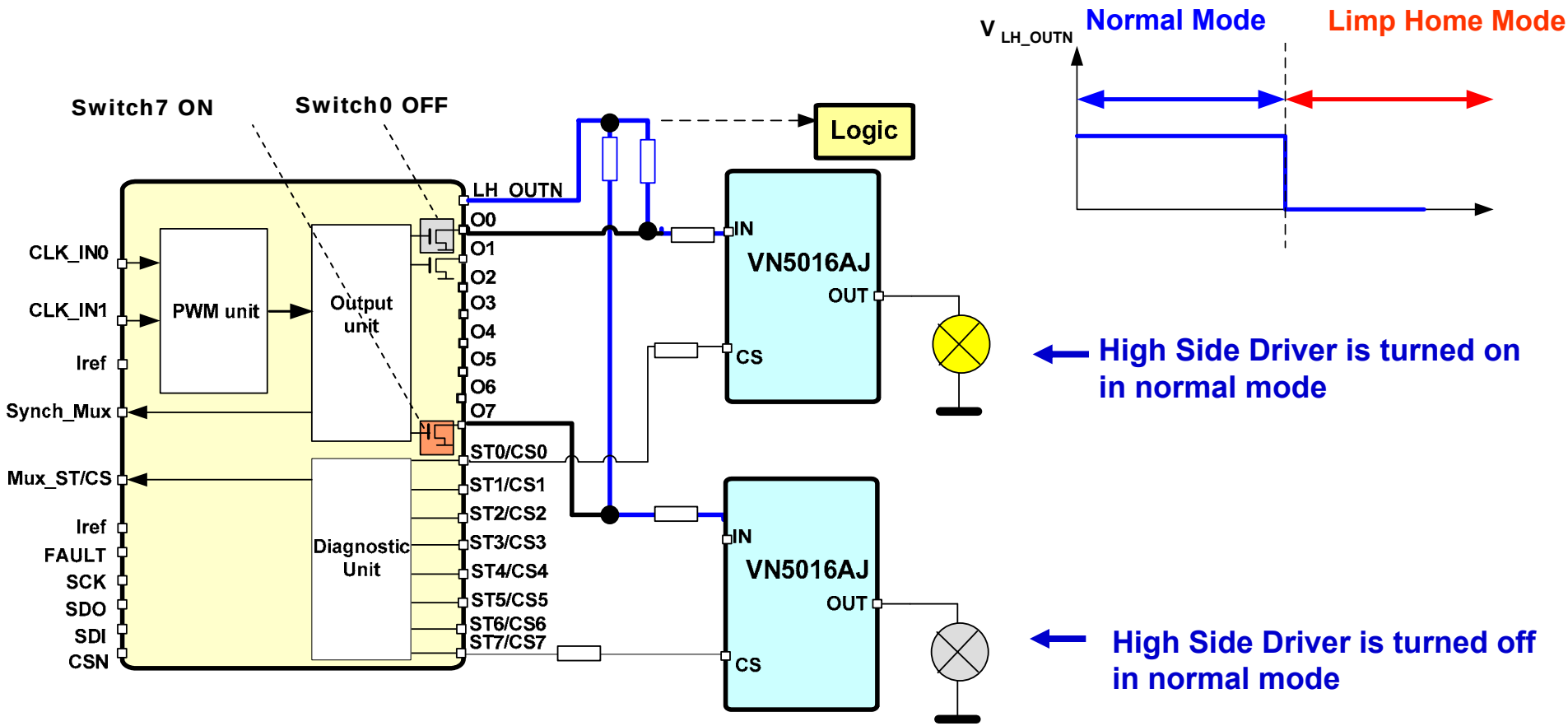

Limp Home Ouput pin in Fail Safe Mode 2/2

In Limp_Home mode: LH_OUTN goes low and the outputs of the AMICO go in High Impedance

The device enters in this mode in case of

- loss of supply
- chip select time out
- unvalid SPI commands interpreted as a short of CSN to GND / Supply
- special SPI command

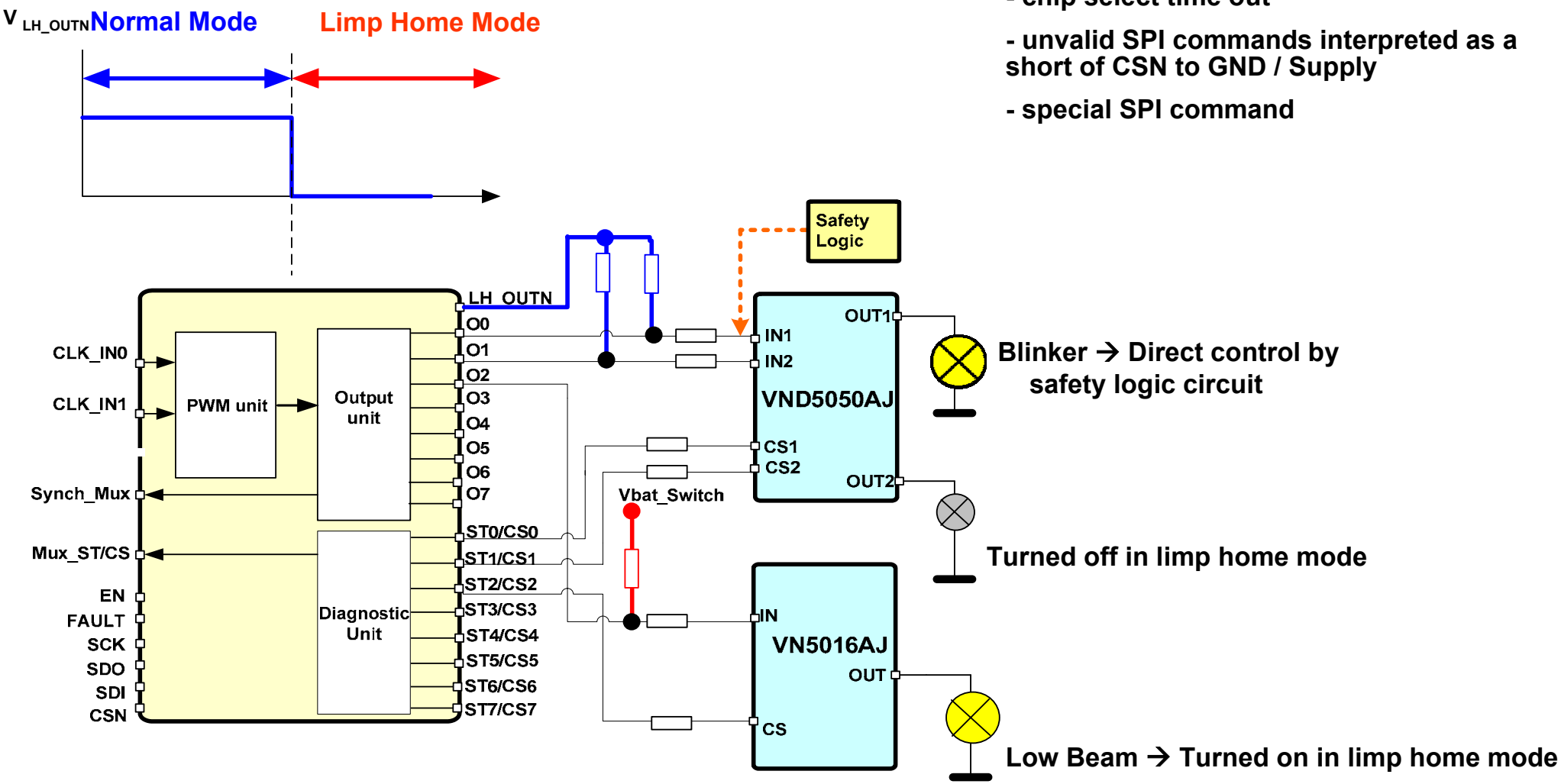

Details of the functionalities

- PWM generation
- Phase shift
- Diagnostic Synchronization Pin
- Chip Select Timeout
- Limp Home
- **On board Filtering**
- Blank Time / Sampling delay
- Synchronous diagnostic
- Direct current reading

On Board Filtering: Example with a current sense high side driver

A sampling of the ST/CS pin is done every 32µs. A failure is reported in the corresponding register if the faulty conditions are observed during the last 3 samplings. The error bit is cleared if 3 consecutive samplings showed a normal operation. Therefore, glitches with a duration below 64µs are filtered out.

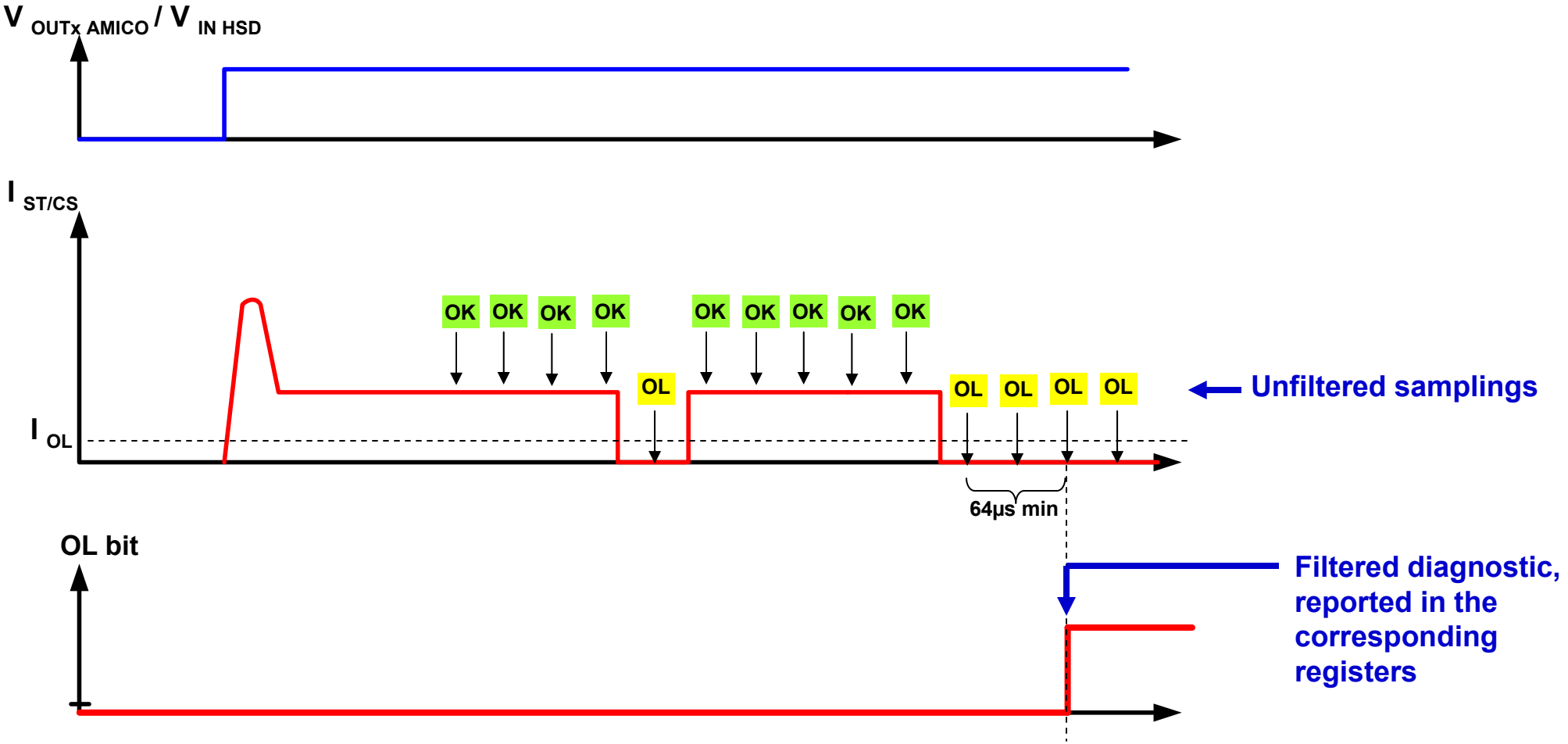

Diagnostic: Example of Software Strategy Recommendation

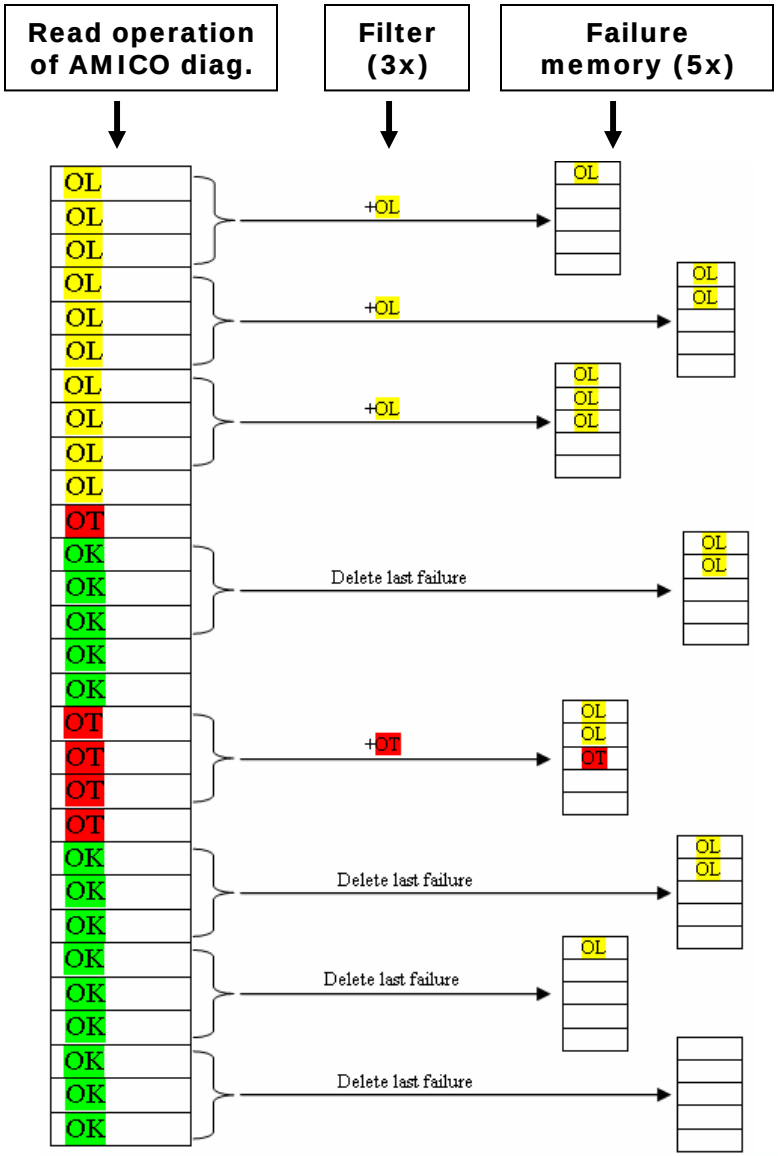

Despite the short time filtering of the AMICO, the diagnostic software should implement a long time filter before the validation of a failure.

This example shows that the failure counter is

- incremented after 3 consecutive error detection of the AMICO
- decremented after 3 consecutive detection of normal operation from the AMICO

Failures are validated if the failure memory reaches 5

Details of the functionalities

- PWM generation
- Phase shift
- Diagnostic Synchronization Pin
- Chip Select Timeout
- Limp Home
- On board Filtering
- **Blank Time / Sampling delay**
- Synchronous diagnostic
- Direct current reading

Blank Time: Example with M05-E high side drivers

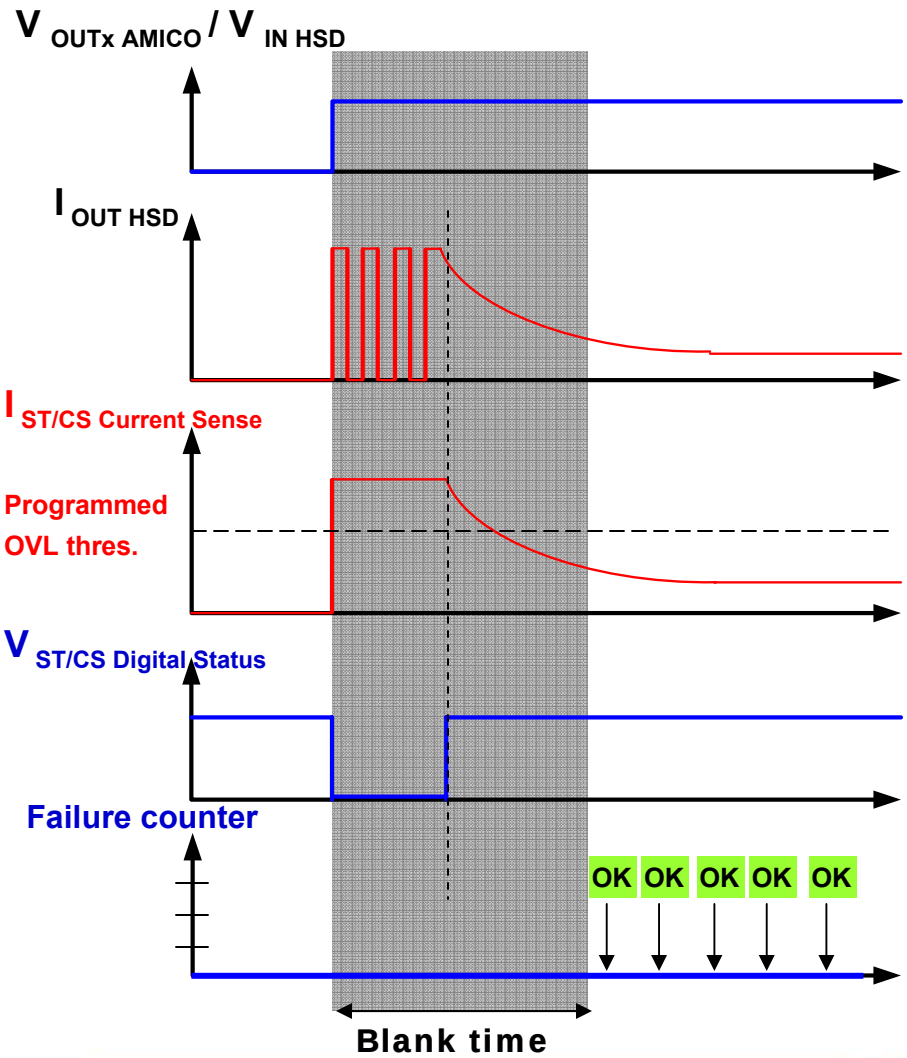

The duration of the blank time is selected between 4 values: 0ms, 15ms, 70ms, 200ms (default value). Any of the 8 channels can be configured independently from the others.

The failure reporting is suspended for the selected duration to avoid a wrong overload detection, e.g. during the inrush phase of a cold bulb.

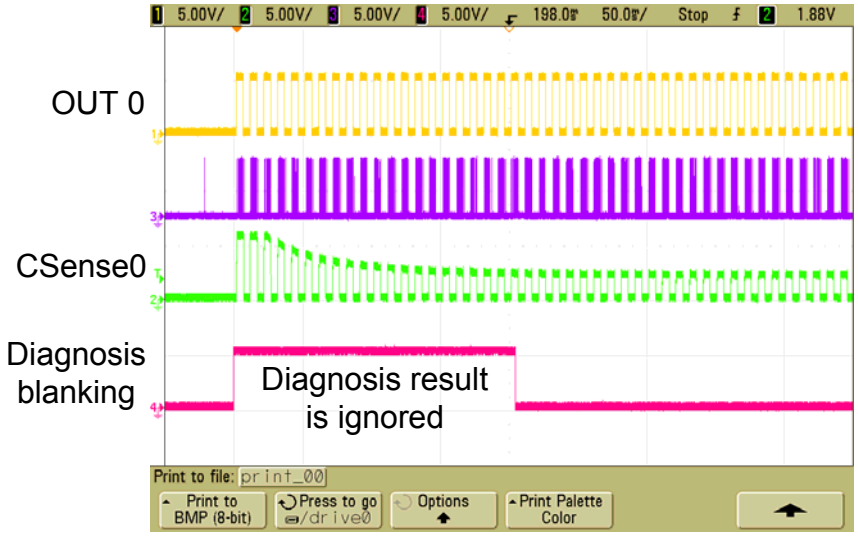

Sampling delay of analog current sense / digital status

Analog Current Sense

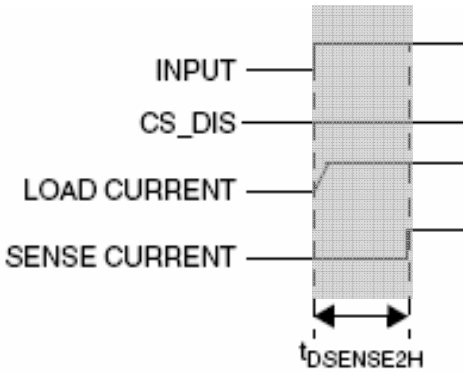

300µs or 600µs max

Digital Status

(Open Load with external pull up at the output)

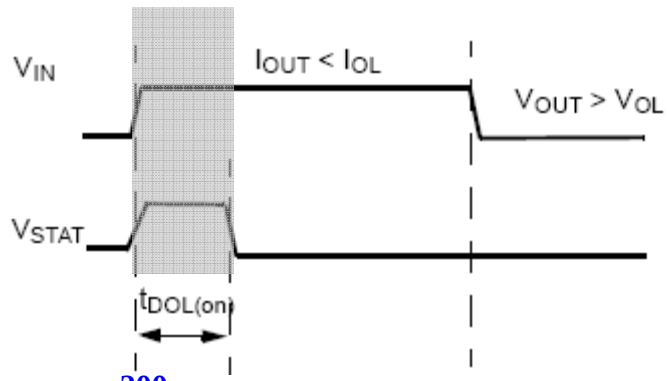

200µs max

If the an analog current sense is selected, the AMICO inhibits the diagnostics for min. 300µs or 600µs (configurable) after a rising edge on the input of the high side driver

If the a digital status is selected, the AMICO inhibits the diagnostics for min. 200µs after a rising edge on the input of the high side driver

Details of the functionalities

- PWM generation
- Phase shift
- Diagnostic Synchronization Pin
- Chip Select Timeout
- Limp Home
- On board Filtering
- Blank Time / Sampling delay
- **Synchronous diagnostic**
- Direct current reading

Diagnostic: Example of today's asynchronous diagnostic with a current sense HSD

Example **! Not implemented in AMICO !**

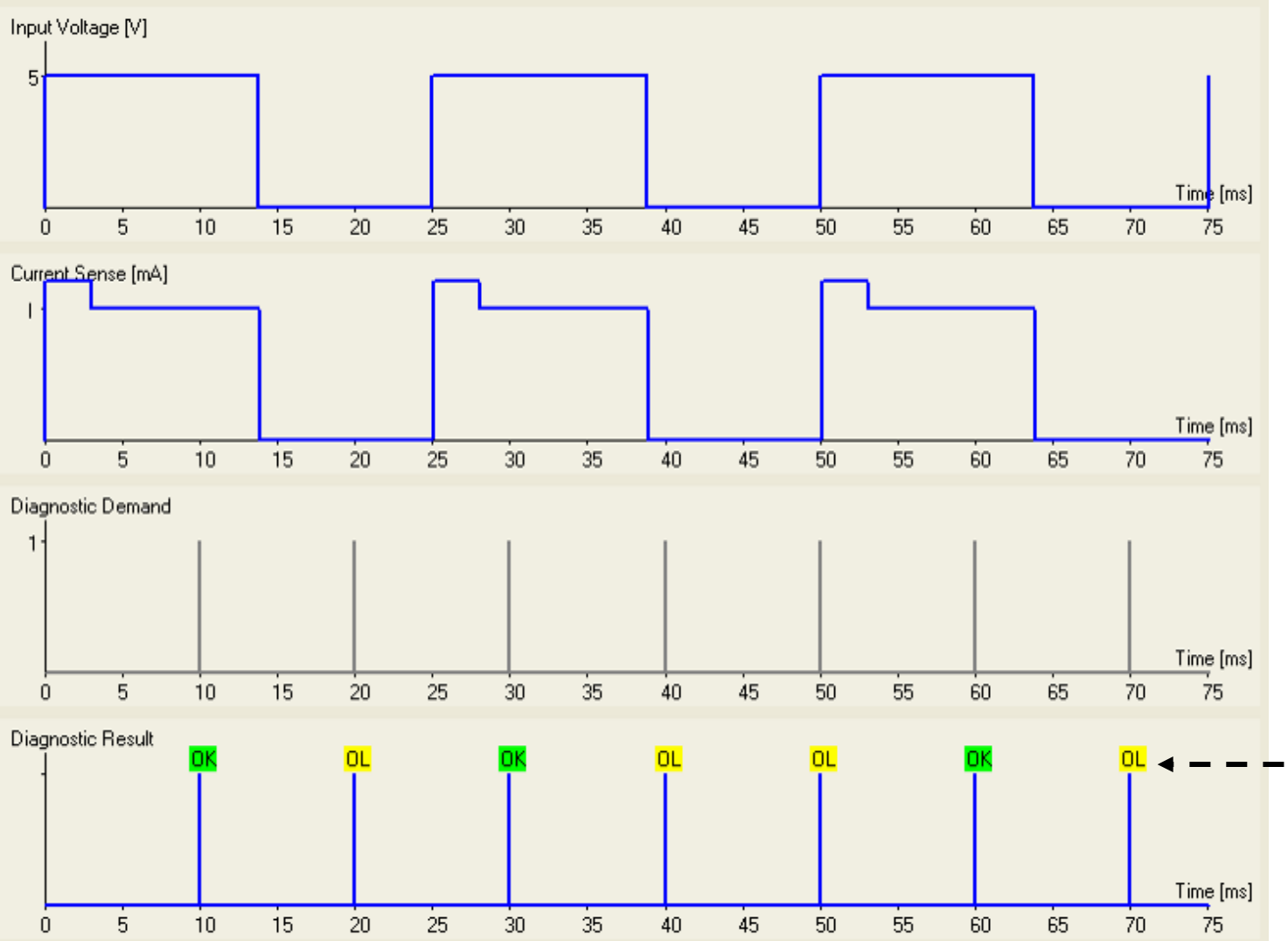

Diagnosis simulation:

- **asynchronous**
- **synchronous**

Possible wrong detection of open load conditions

Diagnostic: AMICO - synchronous diagnostic with a M0-5/E current sense HSD

Case 1: $I_{ST/CS}$ is interpreted as a normal operation

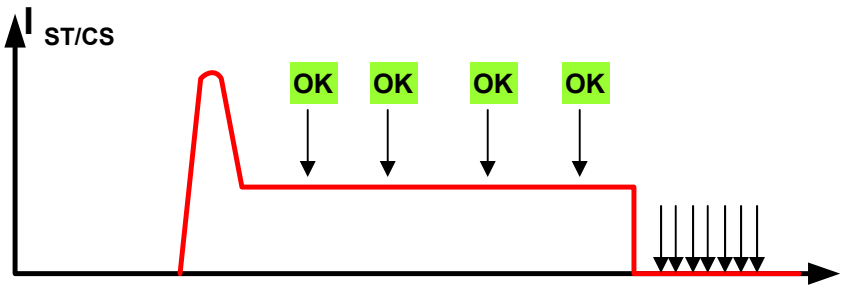

Case 2: $I_{ST/CS}$ is interpreted as an open load failure

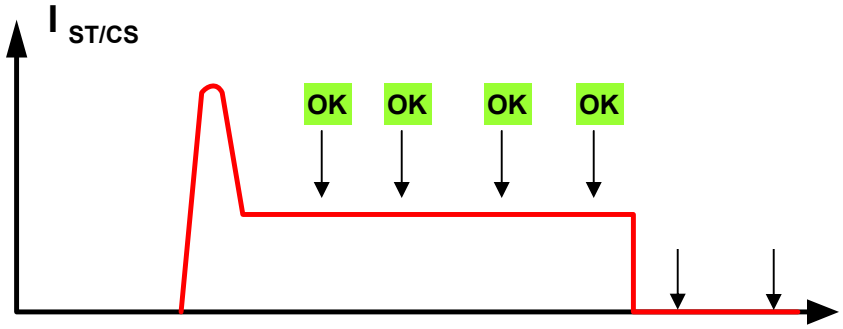

The AMICO makes automatically a synchronous diagnostic to avoid wrong failure detection, and saves ressources from the microcontroller side.

Diagnostic: AMICO - synchronous diagnostic with a M0-5E current sense HSD

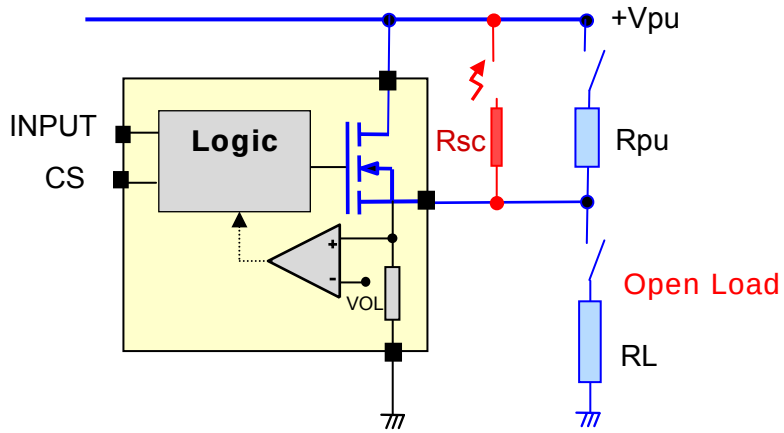

M05-E Current Sense High Side Drivers are able to detect in off state:

- **a short circuit to Vbat**
- **an open load (with a pull up resistor at the output)**

Case 1: $I_{ST/CS}$ is interpreted as an open load (pull up at the output of the HSD) or short circuit to Vbat

Case 2: $I_{ST/CS}$ is interpreted as a power limitation or overtemperature

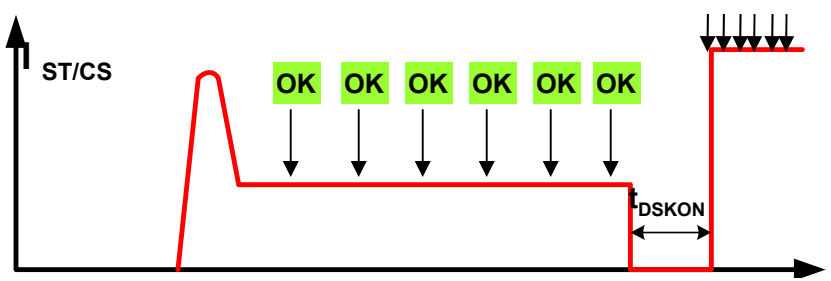

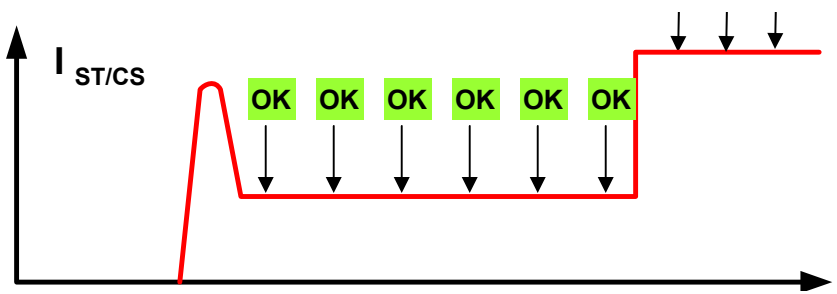

Diagnostic: AMICO - synchronous diagnostic - Example with a digital status HSD

The AMICO enables a synchronous diagnostic and gives a detailed status without ambiguity about the specific channel.

Details of the functionalities

- PWM generation
- Phase shift
- Diagnostic Synchronization Pin
- CS monitor
- Limp Home
- On board Filtering
- Blank Time / Sampling delay
- Synchronous diagnostic
- **Direct current reading**

Direct Current Reading – Current Sense High Side Drivers 1/5

The current coming from the current sense pin of the high side driver is directly compared to current sources in order to detect overtemperature/power limitation, overload or open load failures. The overload and open load thresholds are configurable.

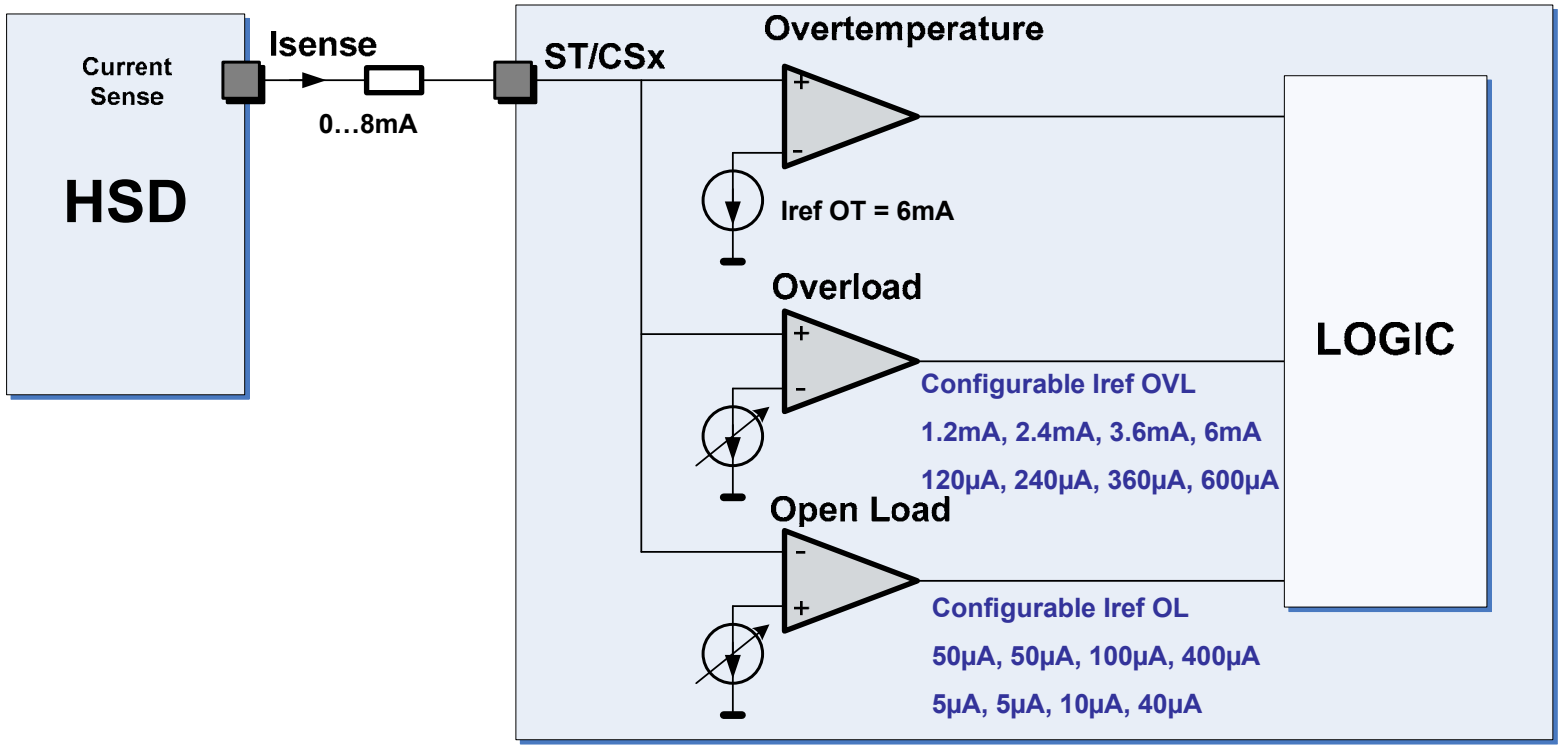

Direct Current Reading – Current Sense High Side Drivers 2/5
Configurability of the overload and open load currents

Iout to reach OVL, OPL	OVL level [A]	Ratio Iovl/Inom	OPL level [A]	Ratio Iopl/Inom
10mΩ(K1), Bulb 55W	5.484	1.28	0.275	0.06
	10.968	2.55	0.275	0.06
	16.776	3.90	0.549	0.13
	27.960	6.50	2.196	0.51
16mΩ(K1), 65W	5.484	1.10	0.251	0.05
	10.968	2.19	0.251	0.05
	16.200	3.24	0.501	0.10
	27.000	5.40	1.824	0.36
25mΩ(K2), 2x21W + 5W	3.312	0.81	0.165	0.04
	6.624	1.62	0.165	0.04
	9.936	2.42	0.330	0.08
	16.560	4.04	1.320	0.32
50mΩ(K2), Bulbs 21 + 5W	2.412	1.05	0.118	0.05
	4.824	2.10	0.118	0.05
	7.236	3.15	0.236	0.10
	12.060	5.24	0.808	0.35
50mΩ(K1), Bulb 10W	2.424	3.15	0.118	0.15
	4.848	6.30	0.118	0.15
	7.272	9.44	0.236	0.31
	12.120	15.74	0.808	1.05
50mΩ(K1), LED @ 300mA	0.242	0.81	0.012	0.04
	0.485	1.62	0.012	0.04
	0.727	2.42	0.024	0.08
	1.212	4.04	0.094	0.31

(OVL and OPL thresholds were calculated on base of Ktyp. value)

Overload detection:
~ 2x Inom. required

Direct Current Reading – Current Sense High Side Drivers 3/5
Configurability of the overload and open load currents

Iout to reach OVL, OPL	OVL level [A]	Ratio Iovl/Inom	OPL level [A]	Ratio Iopl/Inom
160mΩ(K1), Bulb 5W	0.528	1.39	0.025	0.07
	1.056	2.78	0.025	0.07
	1.584	4.17	0.050	0.13
	2.640	6.95	0.180	0.47
160mΩ(K2), Bulb 10W	0.528	0.69	0.025	0.03
	1.056	1.37	0.025	0.03
	1.584	2.06	0.050	0.06
	2.640	3.43	0.180	0.23
25mΩ(K1), 27W + 5W	3.348	1.18	0.165	0.06
	6.696	2.36	0.165	0.06
	9.936	3.50	0.330	0.12
	16.560	5.83	1.320	0.46
50mΩ(K2), Bulb 27W	2.424	1.01	0.118	0.05
	4.824	2.01	0.118	0.05
	7.236	3.02	0.236	0.10
	12.060	5.03	0.944	0.39

(OVL and OPL thresholds were calculated on base of Ktyp. value)

Overload detection:
~ 2x Inom. required

Direct Current Reading – Current Sense High Side Drivers 4/5

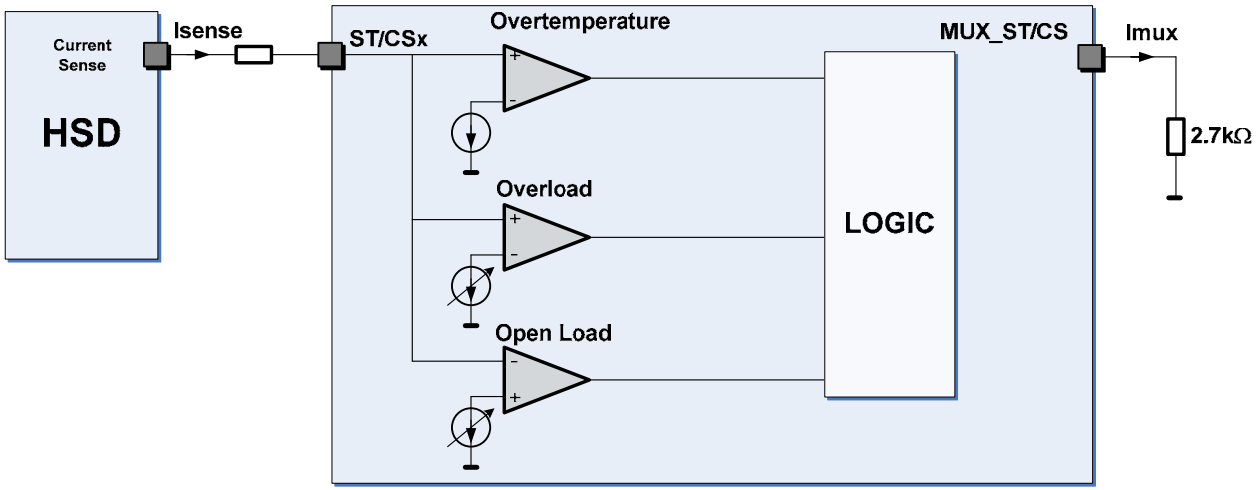

⇨ One single sense resistor, independently from the Rdson classes of the High Side Drivers

Gain	CS_Thres1	CS_Thres0	Imux / Isense Ratio
0	0	0	0.83
0	0	1	0.50
0	1	0	0.33
0	1	1	0.16
1	0	0	8.33
1	0	1	4.99
1	1	0	3.33
1	1	1	1.67

⇨ Improvement of the range of the current sense measurement without additionnal switchable sense resistors (LED/ bulb)

Direct Current Reading – *Current Sense High Side Drivers 5/5*

Example of Mux signal functionality:

Case 1: **50mOhm device with 21W+5W bulb**

- **CFR bit = 0, gain 1:10**
- **Inom 2.3A (13.5V)**
- **Isense 1.14mA**

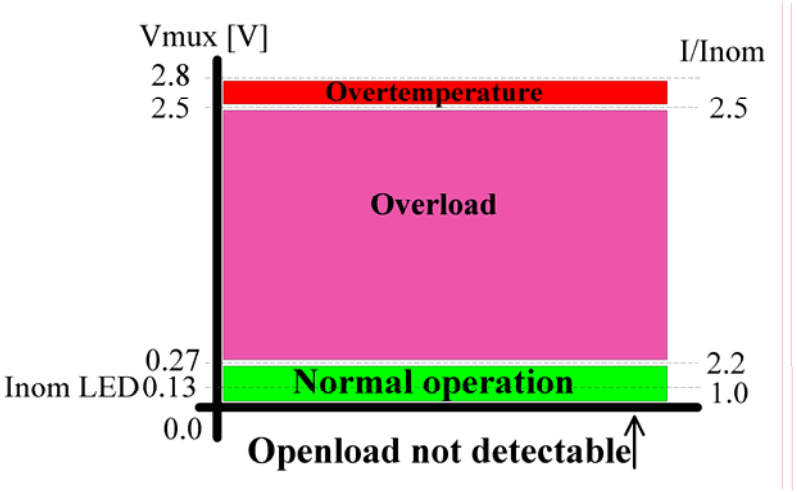

ADC Voltage on µC (for Ktyp and Inom)	Ratio Imux/ Isense	Vmux [V] @Inom	
50mΩ(K2), Bulbs 21 + 5W	0.83	2.56	OVL/OPL_TH:0
	0.50	1.54	OVL/OPL_TH:1
	0.33	1.02	OVL/OPL_TH:2
	0.17	0.51	OVL/OPL_TH:3

Case 2: **50mOhm device with LED**

- **CFR bit = 1, gain 1:1**
- **Inom 0.3A (13.5V)**
- **Isense 0.15mA**

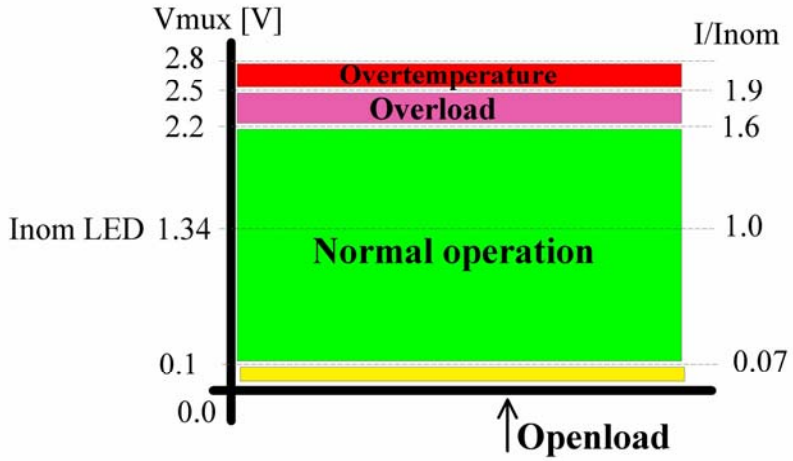

ADC Voltage on µC (for Ktyp and Inom)	Ratio Imux/ Isense	Vmux [V] @Inom	
50mΩ(K1), LED @ 300mA	8.33	3.34	OVL/OPL_TH:0
	5.00	2.00	OVL/OPL_TH:1
	3.33	1.34	OVL/OPL_TH:2
	1.67	0.67	OVL/OPL_TH:3

Presentation Outline

- **Application Example: today / tomorrow**

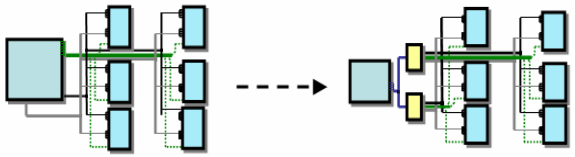

- **Block Diagram and Features**

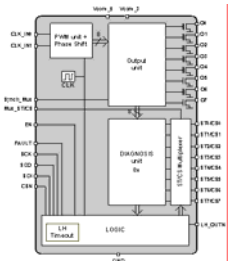

- **Descriptions of the functionalities**

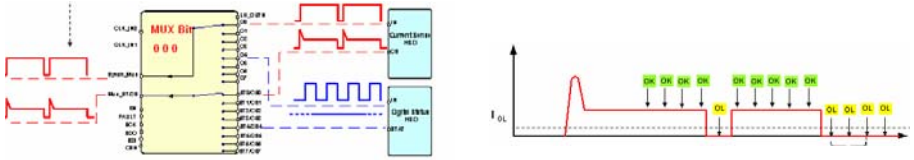

- **Description of the SPI Structure**

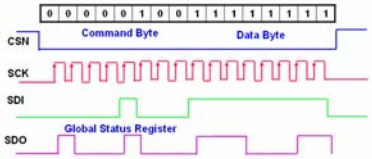

ST-SPI Standardized Communication *Frame Structure*

Write Operation

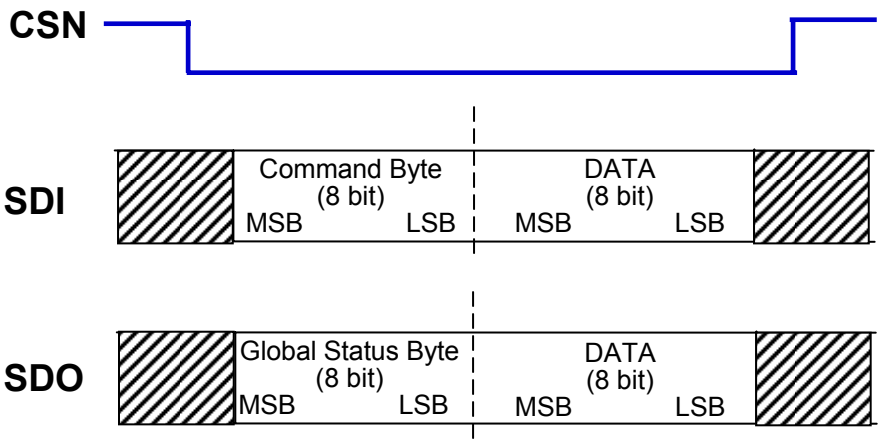

Read Operation

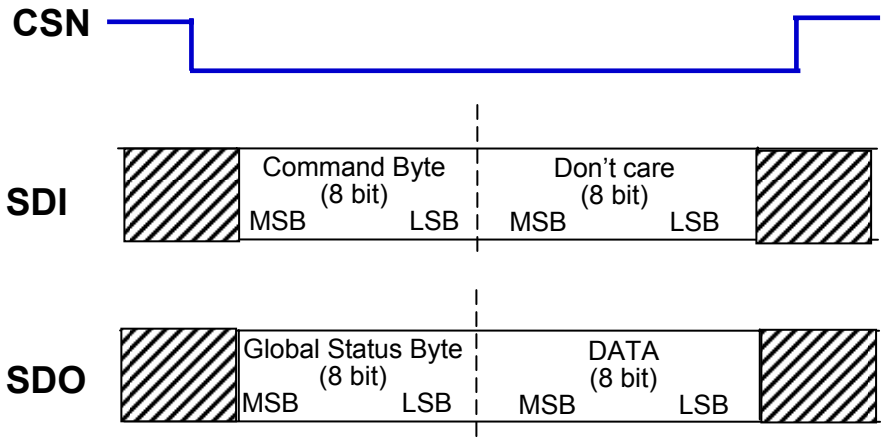

Command Byte

OC1	OC0	A5	A4	A3	A2	A1	A0

Each communication frame starts with a command byte.It consists of an operating code wich specifies the type of operation and a 6 bit address.

OC1	OC0	Operation
0	0	Write Mode
0	1	Read Mode
1	0	Read and Clear Status
1	1	Read Device Information

ST-SPI Device Diagnosis *Global Status Register*

Global Status Register							
Bit 7	Bit 6	Bit 5	Bit 4	Bit 3 *	Bit 2 *	Bit 1 *	Bit 0
Global Error Flag (GEF)	Comm Error	Not (Chip Reset OR Comm Error)	TSD / chip overload	0	Open Load	STK_ON	Fail Safe

Indicates Fail Safe Mode

Short to battery (off-state diagnostic)

Reserved for Device specific Failures

Not used

Thermal Shutdown of the High Side Drivers

Activated by internal reset events

Indicates invalid number of clock cycles

Logic OR of all device failures

ST-SPI Example of Write Command

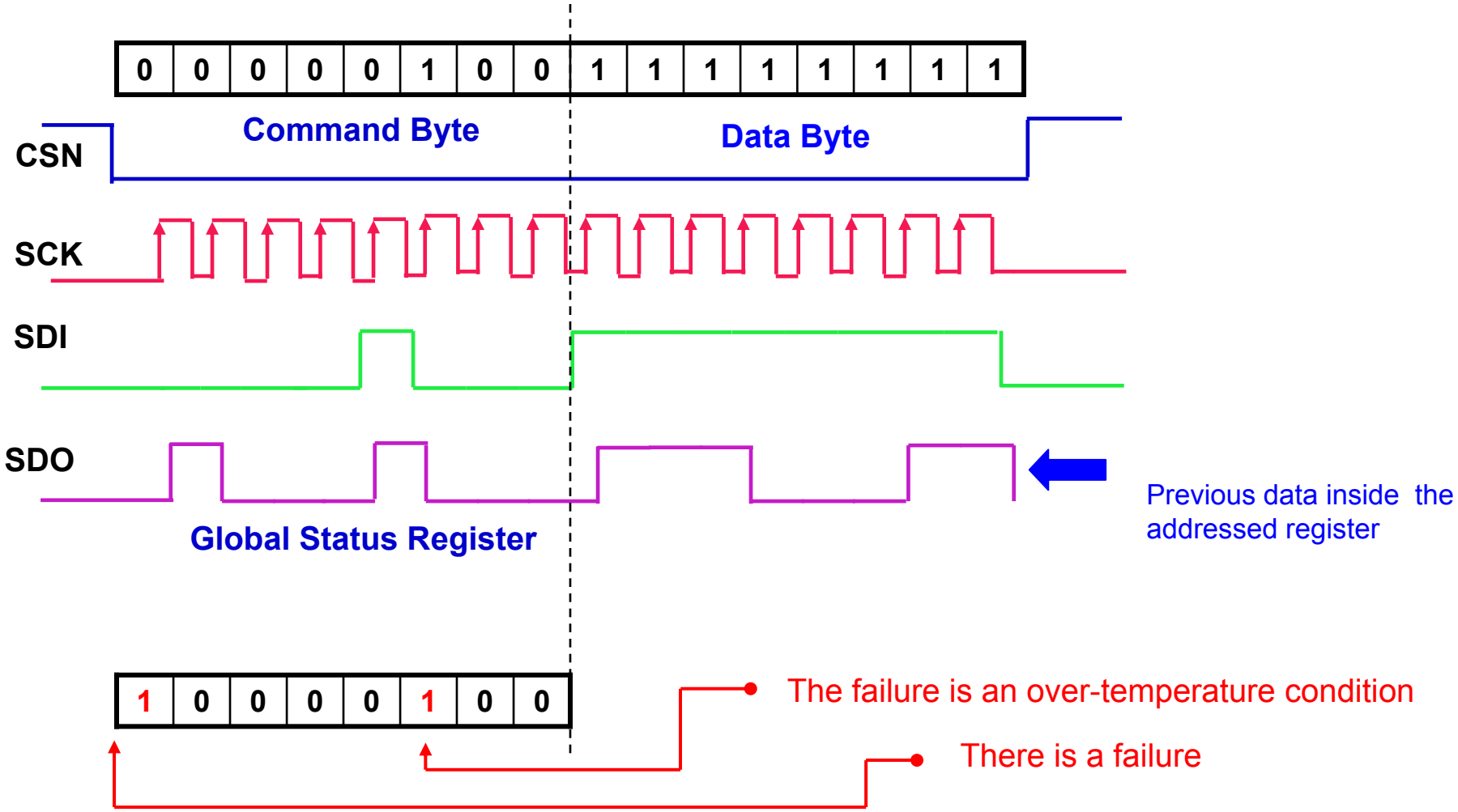

ST-SPI Device Diagnosis *Failure Handling 1/2*

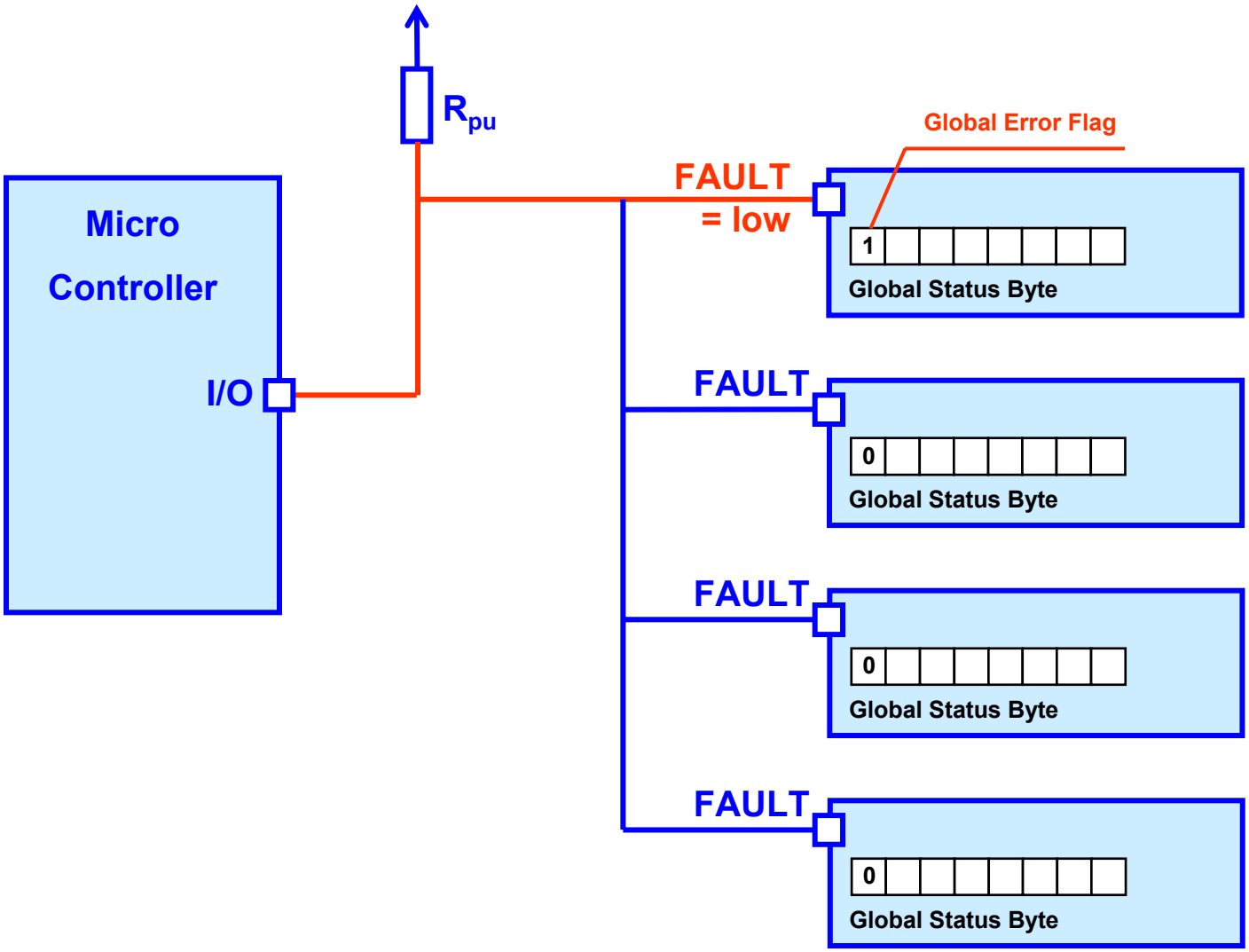

ST-SPI Device Diagnosis *Failure Handling 2/2*

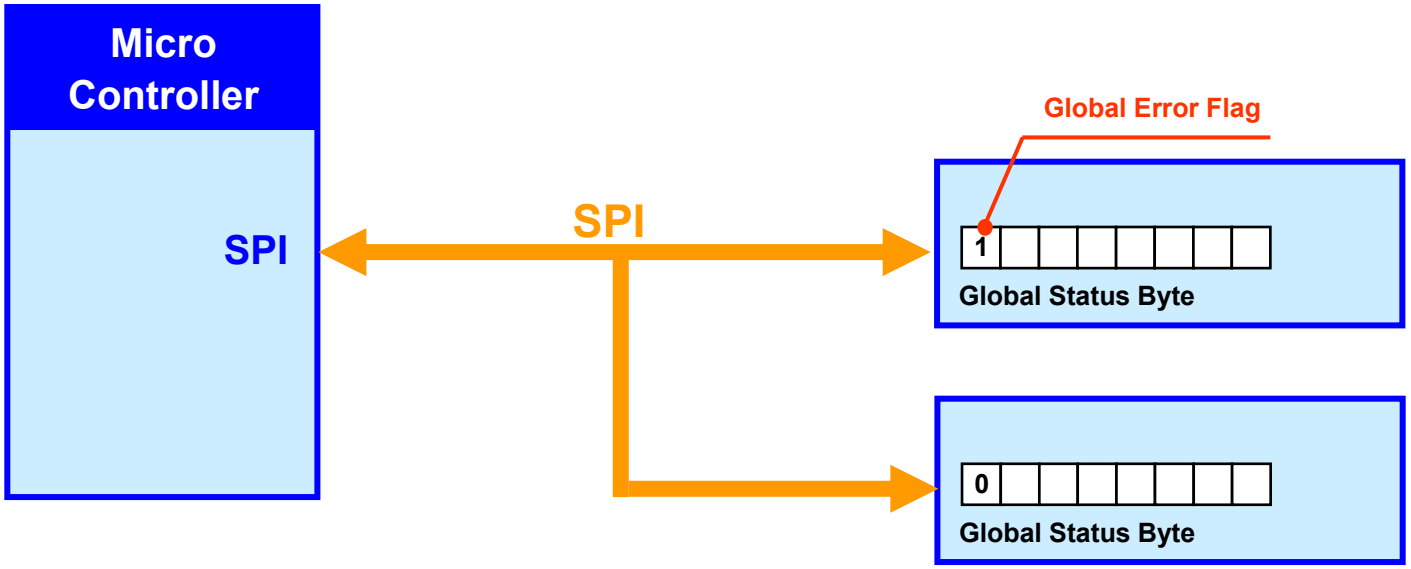

ST-SPI Fail-Safe System Design *FMEA Features 1/2*

RAM Access	
Operating Code	
OC1	OC0
0	0
0	1
1	0

3FH	<Global Control> note 3	R/W
00H	device specific note 1	

Attempt to write to RAM address 00H

If Data Value = ‚0000 0000‘

	Op Code	Address	Data Value
Frame Value:	00	0000 00	0000 0000

Interpreted as ‚Data-In‘-short to GND

Fail-Safe-State

Note 1: The register content is device specific and is defined in the product datasheet

Note 3: register is optional

ST-SPI Fail-safe System Design *FMEA Features 2/2*

ROM Access	
Operating Code	
OC1	OC0
1	1

Attempt to read from ROM address 3FH

3FH	reserved note 2	
3EH	<SPI-frame-ID>	R
	...	
	...	R
05H	<Addtl. Product Info> *	R
04H	<Addtl. Product Info> *	R
03H	<Product Code 2>	R
02H	<Product Code 1>	R
01H	<Silicon Version>	R
00H	<ID-Header>	R

	Op Code	Address	Data Value
Frame Value:	11	1111 11	XXXX XXXX

Interpreted as ‚Data-In'-short to Vcc

Fail-Safe-State

Key Success Factors of the L99PD08

- **Communication via SPI**
  - Configurability
  - FMEA considerations
  - Lower pin counts from µC side

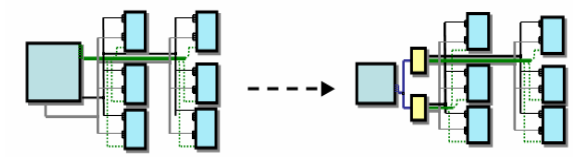

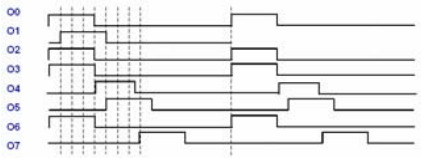

- **Reduces µC ressources**
  - PWM Generation
  - Synchronous diagnostic
  - Detailed diagnostic

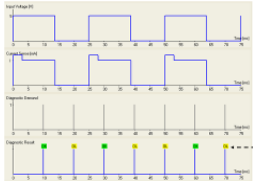

- **Solution based on M0-5 / *Enhanced* Family**
  - Market acceptance
  - Load adaptation
  - Layout flexibility
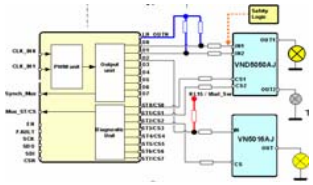
- **Additional functions**
  - Limp home
  - Current multiplexer with config. gains …